PRELIMINARY - SUBJECT TO CHANGE

PALM BEACH COUNTY PROPERTY RECORD CARD

TAX YEAR 2025

LOCATION & OWNER INFORMATION

PARCEL ID	**06-43-46-32-04-005-0080** EX
NBHD	**061700RS**
PARCEL ADDR	784 NE 70TH ST
LEGAL	BOCA HARBOUR 4TH SEC LT 8 BLK E
TAX DISTRICT	06154
OWNER	**GOTTLIEB TODD M & SPATZIER RAQUEL K**
ADDRESS	**784 NE 70TH ST**
	BOCA RATON FL 33487-2430

PALM BEACH COUNTY

0100 PROPERTY USE /SINGLE FAMILY

LIVING UNITS:1 **GIS ACRES: .1928**

TOTAL CARDS:1 **AUTOCAD:**

ENTER INFORMATION

TYPE	DATE	E	I	AP
IMP	28-JUN-24	3	F	35
INCOME				
AG				

TOTAL PARCEL

TYPE	VALUE
MASS	3,707,084
OVERRIDE	
INCOME	0
PRIOR YR VAL	3,876,335
BUILDING	2,245,018
OBY's	108,637
LAND	1,353,429
MARKET	3,707,084
AG/NON AG LAND	
AG LAND & IMP	
LAND MKT VAL	0
LB Ratio (value)	0.37
SOH%	
1 CAMA VALUE	

AG INFORMATION

LINE	CA L#	CROP	LUC	ACRES	RATE	CODE	VALUE
TOTAL							

SALES INFORMATION

BOOK	PAGE	DC	QC	S	PRICE	DATE
31343	467	WD	Q	I	2,637,500	27-MAR-20
30719	792	WD	D	V	246,300	27-JUN-19
AFFILIATED PARTIES PER DEED						
30237	632	WD	Q	I	811,000	24-OCT-18

PERMIT INFORMATION

PERMIT #	PERMIT DT	TYPE	WHY	STAT	TAXYR	AMOUNT
BPR-2024-01319	04-JUN-24	F	05	T	2025	1,000
BPR-2024-01318	31-MAY-24	F	05	T	2025	18,374
20-70	19-FEB-20	F	05	T	2021	5,537
20-260	14-JAN-20	F	05	T	2021	5,340

NOTES

P02-232 PETN2013-1689 PETN2025-2367

OBY INFORMATION

CRD	L#	CODE	YRBLT	EFFYB	YRRMD	WDTH	LGTH	AREA	UNITS	GD	MODCDE	RATE	PC	FC	DEP	FUNC	RSN	ECN	RSN	SOH	VALUE
1	2	DOK	2015	2019				288	1	C	1	95.55	A	A	81					0	22,290.00
1	3	BOL	2015	2019				1	1	B	1	18,900.00	A	A	81					0	15,309.00
1	4	PL2	2020	2020				1	1	C		41,200.00	A	A	85					100	35,020.00
1	5	ELV	2020	2020				1	1	C		34,900.00	A	A	85					100	29,665.00
1	6	BBQ	2020	2020				1	1	C	4 5	7,474.00	A	A	85					100	6,353.00
																			OBY VALUE		108,637.00

LAND INFORMATION

L#	LUSE	ZONE	AG	AGLND	TP	CDE	AFF	EFF	DEPTH	SQ FT	ACRES	UNITS	RATE	SIZE	NBHDF	INF	PCT	SOH	VALUE
1	0131	R-1-C			U	W1			0	8,400	0.19	1	1,455,300.00 T		.93		0	100	1,353,429.00

NOTES: WTR 80FF FUTURE LAND USE: REV: 53 A 08-JUN-22

TOTAL ACRES .1928 TOTAL LAND VALUE 1,353,429.00

PRELIMINARY - SUBJECT TO CHANGE

PALM BEACH COUNTY PROPERTY RECORD CARD

TAX YEAR 2025

SUB-AREA INFORMATION

	LINE	CODE	PCT	SIZE
A	0	BAS	100	2226
	BASE AREA			
A1	1	FOP	28	514
	FINISHED OPEN PORCH			
A2	2	FGR	44	266
	FINISHED GARAGE			
A3	3	FOP	28	65
	FINISHED OPEN PORCH			
A4	4	FGR	44	462
	FINISHED GARAGE			
A5	5	FUS	87	2683
	FINISHED UPPER STORY			
A6	6	FOP	28	294
	FINISHED OPEN PORCH			
A7	7	NVA	0	154
	NO VALUE AREA			
A8	8	BLC	25	75
	BALCONY			
A9	9	FOP	28	35
	FINISHED OPEN PORCH			
A10				
A11				
A12				
A13				
A14				
A15				
A16				
A17				
	TOTAL SQ FT			6774

06-43-46-32-04-005-0080 RESIDENTIAL 784 NE 70TH ST

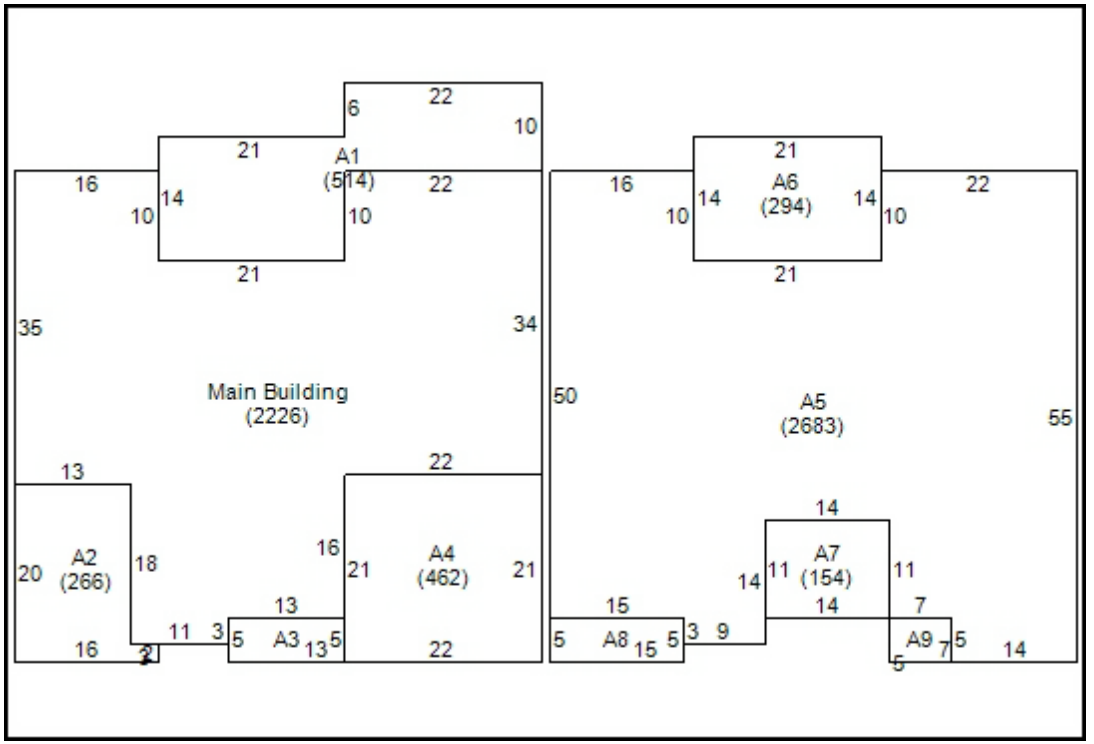

VECTOR:

BAS(A0CL22D10L21U10L16D35R13D18R11U3R13U16R22U34)FOP(A1U10CL22D6L21D14R21U10R22U10)FGR(A2L46D35CL13D20R16U2L3U18)FOP(A3L22D50CL13D5R13U5)FGR(A4D34CL22D21R22U21)FUS(A5R60CL22D10L21U10L16D50R15D3R9U14R14D11R7D5R14U55)FOP(A6R38U4CL21D14R21U14)NVA(A7R39D39CL14D11R14U11)BLC(A8R16D50CL15D5R15U5)FOP(A9R46D50CL7D5R7U5)

BUILDING INFORMATION

1	/	1	SYS CRD# /TOT BLDGS
0900	ID	1	EXC-RESIDENT
			C&D
1.41			NBHD FACTOR
			LEVEL / UNIT TYPE
2	/		UNIT HEIGHT / BLDG HEIGHT
6	/		BED RM / TOT RM
6	/	1	FULL BA / HALF BA
	/	20	ADD FIX / TOTAL FIX
2020	/	2020	YRBLT / EFFYR
	/		YR / % REMODELED
			REMOD KTCH / BATH
R6	/	AV	GRADE / CDU
95	/	C40	% GOOD / DEPR TB
			FPLC STACK / OPEN
17			EW1 MSY: CB STUCCO
			EW2 NONE
04			RS WOOD TRUSS
07			RC CONCRETE TILE
08			IW1 DECORATIVE WALL
			IW2 N/A
15			FT1 CERAMIC/QUARRY
12			FT2 HARDWOOD
3			HEAT HTG & AC
4			HEAT SYS FORCED AIR DUCT
			KB_ADJ
			MKT_ADJ
			FUNC
			ECON
100			SOH%
		5,153	EFF BLDG AREA
		4,909	SQ FT LIVING AREA
		5,153	TOTAL EBA

NOTES:

BLDG 001 BOL/DOK EST. GATE 12/2015

BLDG 001 FUS,FGR ARE EST #48

L#	COD	LENGTH	WIDTH	EL ST	ID UT	VALUE

1,676,011	RCN
1,592,211	RCNLD
2,245,018	ADJRCNLD
1	TOTAL ID UNIT VALUE

LN NO	SE NO	LEVEL FR	LEVEL TO	YR BLT	EFF YB	AREA SIZE	EXTER PERM	USE TYPE	USE NAME	WA HT	EXTERIOR WALL TYPE	CN TYP	INT FIN	INT PAR	INT HT	INT AC	INT PLB	INT LGT	PHY CND	FNC UT	FNC RSN	FNC %GD	ENC RSN	ENC %GD